SmartLine

Honeywell

Technical Information

STF800 SmartLine Flange Mounted Level Specification 34-ST-03-87, October 2023

Introduction

Part of the SmartLine® family of products, the STF800 is a high performance flange mounted level transmitter featuring piezoresistive sensor technology. STF800 transmitters may be directly mounted onto a tank flange and are offered with a variety of tank connections including various flush and extended diaphragm configurations. STF800 offers high accuracy and stability over a wide range of level applications. The SmartLine family is also fully tested and compliant with Experion® PKS providing the highest level of compatibility assurance and integration capabilities. SmartLine easily meets the most demanding application needs for pressure measurement applications.

Best in Class Features:

- Accuracies up to 0.0375% of span standard & 0.025% of span optional.
- Stability up to 0.01% of URL per year for 15 years.
- Automatic static pressure & temperature compensation.
- Rangeability up to 100:1.
- Response times as fast as 90ms.
- Multiple local display capabilities.
- External zero, span, & configuration capability.
- Polarity insensitive electrical connections.
- Comprehensive on-board diagnostic capabilities.
- Integral Dual Seal design for highest safety based on ANSI/NFPA 70-202 and ANSI/ISA 12.27.0.
- World class overpressure protection.
- Full compliance to SIL 2/3 requirements.
- Modular design characteristics.
- Available with additional 15-year warranty.
- Plugged Impulse Line Detection Option.
- Supports NAMUR NE-107 Extended Diagnostics (FF).
- Dual/Triple Calibration Option (HART & Fieldbus Only).

Figure 1 – STF800 Flanged Level Transmitters feature field-proven piezoresistive sensor technology

Communications/Output Options:

- 4.20 mA
- Honeywell Digitally Enhanced (DE)
- HART ® (version 7.0)
- FOUNDATION™ Fieldbus

All transmitters are available with the above listed communications protocols.

Span & Range Limits:

Model	URL H_2O (mbar)	LRL H_2O (mbar)	Min Span H_2O (mbar)
STF828	400 (1000)	-400 (-1000)	4.0 (10.0)
STF82F	400 1000)	-400 (-1000)	4.0 (10.0)
Model	**psi (bar)**	**psi (bar)**	**psi (bar)**
STF832	100 (7.0)	-100 (-7.0)	1 (0.07)
STF83F	100 (7.0)	-100 (-7.0)	1 (0.07)

Description

The SmartLine transmitters are designed around a high performance piezo-resistive sensor. This one sensor actually integrates multiple sensors linking process pressure measurement with on-board static pressure (DP & Level Models) and temperature compensation measurements resulting in the best total performance available. This level of performance allows the ST 800 to replace virtually any competitive transmitter available today.

Unique Indication/Display Options

The ST 800 modular design accommodates a standard alphanumeric LCD display or a unique advanced graphics LCD display with many unparalleled features.

Standard LCD Display Features

- Modular (may be added or removed in the field).
- Supports HART protocol variant.
- 0, 90,180, & 270 degree position adjustments.
- Four configurable screens.
- Standard and custom measurement units available.
- Display calculated flow (square root) value in addition to analog output signal.
- 2 Lines 6 digits PV (9.95H x 4.20W mm) 8 Characters.
- Write protect Indication.
- Built-in Basic Device Configuration through Internal or External Buttons – Range/Engineering Unit/Loop Test /Loop Calibration/Zero /Span Setting.
- Multiple language capabilities (EN, RU).

Advanced Graphics LCD Display Features

- Modular (may be added or removed in the field).
- 0, 90, 180, & 270-degree position adjustments.
- Standard and custom measurement units available.
- Up to eight display screens with 3 formats are possible.
- Large PV with Bar Graph or PV with Trend Graph.
- Configurable screen rotation timing (1 to 30 sec).
- Display calculated flow (square root) value in addition to analog output signal.
- Unique “Health Watch” indication provides instant visibility of diagnostics.
- Multiple language capability (EN, DE, FR, IT, ES, RU, TR, CN, & JP).

Diagnostics

SmartLine transmitters all offer digitally accessible diagnostics which aid in providing advanced warning of possible failure events minimizing unplanned shutdowns, providing lower overall operational costs.

Configuration Tools

Integral Three Button Configuration Option

Suitable for all electrical and environmental requirements, SmartLine offer the ability to configure the transmitter and display via three externally accessible buttons when either display option is selected. Zero/span capabilities are also optionally available via these buttons with or without selection of a display option.

Handheld Configuration

SmartLine transmitters feature two-way communication and configuration capability between the operator and the transmitter. All Honeywell transmitters are designed and tested for compliance with the offered communication protocols and are designed to operate with any standards compliant handheld configuration device, such as Honeywell Versatilis Configurator.

Personal Computer Configuration

On a personal computer or laptop, Honeywell Field Device Manager (FDM) Software and FDM Express can be used for managing HART & Fieldbus device configurations.

System Integration

- SmartLine communications protocols all meet the most current published standards for HART/DE/Fieldbus.
- Integration with Honeywell’s Experion PKS offers the following unique advantages.
  - Transmitter messaging.
  - Maintenance mode indication.
  - Tamper reporting.
  - FDM Plant Area Views with Health summaries.
  - All ST 800 units are Experion tested to provide the highest level of compatibility assurance.

Modular Design

To help contain maintenance & inventory costs, all ST 800 transmitters are modular in design supporting the user's ability to replace meter bodies, add indicators or change electronic modules without affecting overall performance or approval body certifications. Each meter body is uniquely characterized to provide in-tolerance performance over a wide range of application variations in temperature and pressure and due to the Honeywell advanced interface, electronic modules may be swapped with any electronics module without losing in-tolerance performance characteristics.

Modular Features

- Meter body replacement.
- Exchange/replace electronics/comms modules*.
- Add or remove integral indicators*.
- Add or remove lightning protection (terminal connection)*.

* Field replaceable in all electrical environments (including IS) except flameproof without violating agency approvals.

With no performance effects, Honeywell's unique modularity results in ***lower inventory needs and lower overall operating costs.***

Plugged Impulse Line Detection:

STF800 models are offered with a PILD option which provides indication of a plugged impulse line or process connection. When used in conjunction with an advanced display, a non-critical diagnostic indication appears on the integral display. For units without an integral display, an indication can be seen via the host or hand-held device when HART Protocol is utilized.

Dual/Triple Calibration:

STF800 models are optionally offered with multiple calibrations. In lieu of a standard factory calibration, units can be supplied with 1, 2, or 3 customer specified calibrations. These calibrations are stored in the meter body and provide users with factory calibrated performance at up to three different calibrated ranges. This increases application flexibility without requiring any costly recalibration or additional inventory.

Performance Specifications

Reference Accuracy (conformance to +/-3 Sigma)

Table 1

Model	URL	LRL	Min Span	Maximum Turndown Ratio	Stability (%URL/ Year for 15 years)	Reference Accuracy[1,2] (% Span) Std/Opt.
STF828	400 in H_2O (1000mbar)	-400 in H_2O (-1000mbar)	4 in H_2O (10.0mbar)	100:1	0.01	0.0375 /0.025
STF82F	400 in H_2O (1000mbar	-400in H_2O (-1000mbar)	4 in H_2O (10.0mbar)	100:1		
STF832	100 psi (7.0 bar)	-100 psi (-7.0 bar)	1 psi (0.07 bar)	100:1	0.025	0.0375 /0.0325
STF83F	100 psi (7.0 bar)	-100 psi/ (-7.0 bar)	1 psi (0.07 bar)	100:1		

Zero and span may be set anywhere within listed (URL/LRL) range limits

Accuracy at specified Span, Temperature and Static Pressure (conformance to +/-3)

Table 2

			Accuracy[1,2] (% of Span)				Combined Zero & Span Temperature Effect (% Span (50ºF))		Combined Zero & Span Static Line Pressure Effect[4] (% Span/1000psi)[3]	
	Model	URL	Reference Turndown	A	B	C (see URL units)	D	E	F	G
Standard Accuracy	STF828	400 in H_2O (1000mbar)	16:1	0.005	0.0325	25 (62.5)	0.210	0.040	0.095	0.010
	STF82F	400 in H_2O (1000mbar)					0.025	0.007	0.025	0.005
	STF832	100 psi (7.0 bar)	6.7:1	0.005	0.0325	15 (1.05)	0.075	0.050	0.095	0.010
	STF83F	100 psi (7.0 bar)					0.025	0.004	0.026	0.004
High Accuracy Option	STF828	400 in H_2O (1000mbar)	16:1	0.005	0.020	25 (62.5)	0.21	0.04	0.095	0.01
	STF82F	400 in H_2O (1000mbar)					0.025	0.007	0.025	0.005
	STF832	100 psi (7.0 bar)	6.7:1	0.005	0.0275	15 (1.05)	0.075	0.050	0.095	0.010
	STF83F	100 psi (7.0 bar)					0.025	0.004	0.026	0.004
			Turn Down Effect $\pm[A+B] \quad if\ Span \geq C$ $\pm\left[A+B\left(\frac{C}{Span}\right)\right] \quad if\ Span < C$				**Temp Effect** $\pm[D+E\left(\frac{URL}{Span}\right)]$		**Static Effect** $\pm[F+G\left(\frac{URL}{Span}\right)]$	

Total Performance = +/- $\sqrt{(\text{Accuracy})^2 + (\text{Temp Effect})^2 + (\text{Static Line Pressure Effect})^2}$

Total Performance (% of Span):

Total Performance Examples: (standard accuracy 5:1 Turndown, up to 50 ºF shift & up to 300 psi Static Pressure)

STF828 @ 80 in H_2O: 0.436% of span
STF82F @ 80 in H_2O: 0.087% of span
STF832 @ 20 psi: 0.358 % of span
STF83F@ 20 psi: 0.074 % of span

Typical Calibration Frequency:

Calibration verification is recommended every four (4) years

Notes:

1. Terminal Based Accuracy – Includes effects of linearity, hysteresis and repeatability. Analog output adds 0.005% of span.
2. For zero based spans and reference conditions of 25ºC, 0 psig static pressure, 10 to 55% RH.

Operating Conditions – All Models

Parameter	Reference Condition		Rated Condition		Operative Limits		Transportation and Storage	
	°C	°F	°C	°F	°C	°F	°C	°F
Ambient Temperature[1]	25±1	77±2	-40 to 85	-40 to 185	-40 to 85	-40 to 185	-55 to 120	-67 to 248
Meter Body Temperature[2]	25±1	77±2	-40 to 110*	-40 to 230*	-40 to 125	-40 to 257	-55 to 120	-67 to 248
Process Interface Temp. STF828, STF832 only	25±1	77±2	-40 to 110[1]	-40 to 230[1]	-40 to 175[2]	-40 to 350[2]	-55 to 125	-67 to 257
Humidity %RH	10 to 55		0 to 100		0 to 100		0 to 100	
Minimum Pressure **mmHg absolute** **inH_2O absolute**	 atmospheric atmospheric		 25 13		 2 (short term[3]) 1 (short term[3])			
Supply Voltage **Load Resistance**	HART: 10.8 to 42.4 VDC at terminals (IS versions limited to 30 VDC), 0 to 1,440 ohms DE: 15 to 49.3VDC at terminals (IS versions limited to 30VDC), 0 to 1,200 ohms (as shown in Figure 2) FOUNDATION Fieldbus: 9.0 to 32.0 VDC at terminals, steady state current: 17.6mA, software download current: 27.4mA							

[1] Silicone 704 minimum temperature rating is 0ºC (32ºF). NEOBEE M-20 minimum temperature rating is -15ºC (5ºF). NEOBEE® is a registered trademark of Stepan Company.
[2] For CTFE fill fluid, the maximum temperature rating is 150°C (300°F).
[3] Short term equals 2 hours at 70°C (158 °F).

Maximum Allowable Working Pressure (MAWP) [5, 6]

(ST 800 products are rated to Maximum Allowable Working Pressure. MAWP depends on Approval Agency and transmitter materials of construction.)

STF828 & STF832	Flange Material	Ambient Temperature -29 to 38°C [-20 to 100°F]	Max Meterbody Temperature 125°C [257°F]	Process Interface Temperature 175°C [350°F]
ANSI Class 150 **psi (bar]**	Carbon Steel 304 S.S. 316 S.S.	285 (19.6] 275 [19.0] 275 [19.0]	245 [16.9] 218 [15.0] 225 [15.5]	215 [14.8] 198 [13.7] 205 [14.1]
ANSI Class 300 **psi [bar]**	Carbon Steel 304 S.S. 316 S.S.	740 [51.0] 720 [49.6] 720 [49.6]	668 [46.0] 570 [39.3] 590 [40.7]	645 [44.5] 518 [35.7] 538 [37.1]
DN PN40 **psi [bar]**	Carbon Steel 304 S.S. 316 S.S.	580 [40.0] [4] 534 [36.8] [4] 534 [36.8] [4]	574 [39.6] 419 [28.9] 434 [29.9]	559 [38.5] 385 [26.5] 399 [27.5]
STF82F & STF83F ANSI Class 150 psi [bar]	316L Stainless Steel	230 [15.9]	185 [12.8]	No rating at this temp

[4] Ambient Temperature for DN PN40 is –10 to 50°C [14 to 122 F]

[5] MAWP applies for temperature range -40 to 125°C. However, Static Pressure Limit is de-rated to 3,000 psi from -26°C to -40°C. Use of graphite o-rings de-rates transmitter to 3,625 psi. Use of adaptor with graphite o-rings de-rates transmitter to 3,000 psi.

[6] Consult factory for MAWP of ST 800 transmitters with CSA approval.

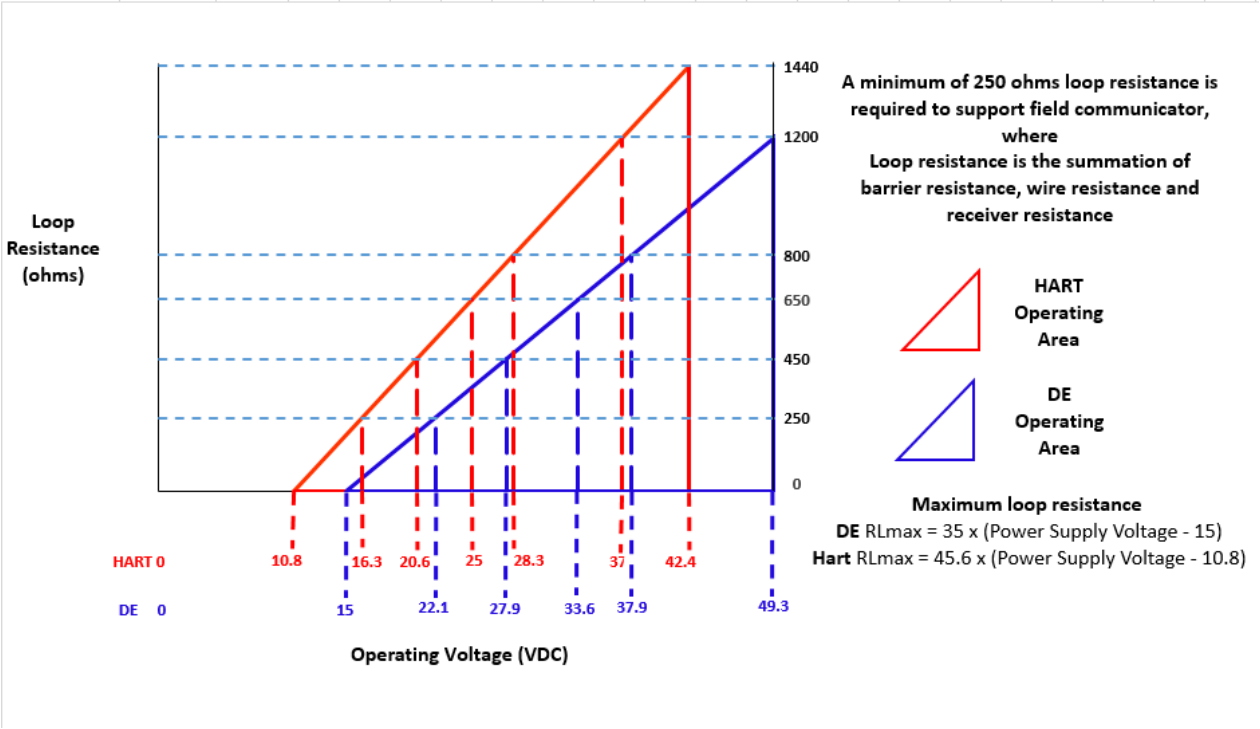

Figure 2 - Supply voltage and loop resistance chart & calculations

Performance Under Rated Conditions – All Models

Parameter	Description
Analog Output **Digital Communications**:	Two-wire, 4 to 20 mA (HART & DE Transmitters only) Honeywell DE, HART protocol or FOUNDATION Fieldbus ITK 6.0.1 compliant All transmitters, irrespective of protocol have polarity insensitive connection.
HART & DE Output Failure Modes (NAMUR for DE Units requires selecting display and configuration buttons or factory configuration)	**Honeywell Standard** / **NAMUR NE 43 Compliance** **Normal Limits:** 3.8 – 20.8 mA / 3.8 – 20.5 mA **Failure Mode:** ≤ 3.6 mA and ≥ 21.0 mA / ≤ 3.6 mA and ≥ 21.0 mA
Supply Voltage Effect	0.005% span per volt
Transmitter Turn on Time (includes power up & test algorithms)	HART or DE: 2.5 seconds. Foundation Fieldbus: host dependent
Response Time (delay + time constant)	**DE/HART Analog Output**: 90ms **FOUNDATION Fieldbus**: 150ms (Host Dependent)
Damping Time Constant	**HART:** Adjustable from 0 to 32 seconds in 0.1 increments. **Default:** 0.50 seconds **DE:** Discrete values 0, .16, .32, .48, 1, 2, 4, 8, 16, 32 seconds. **Default:** 0.48 seconds
Vibration Effect	Less than +/- 0.1% of URL w/o damping Per IEC60770-1 field or pipeline, high vibration level (10-2000Hz: 0.21 displacement/3g max acceleration)
Electromagnetic Compatibility	IEC 61326-3-1
Lightning Protection Option	**Leakage Current:** 10uA max @ 42.4VDC 93C **Impulse rating:** 8/20us 5000A (>10 strikes) 10000A (1 strike min.) 10/1000us 200A (> 300 strikes)

Materials Specifications (see model selection guide for availability/restrictions with various models)

Parameter	Description
Barrier Diaphragms Material	316L SS, Hastelloy® C-276[2], Monel® 400 **[3]
Process Head Material	316 SS[4], Carbon Steel (Zinc-plated) [5], Hastelloy C-276*[6], Monel 400 **[7]
Vent/Drain Valves & Plugs [1]	316 SS[4], Hastelloy C-276[2], Monel 400 [7]
Gasket Ring Material (Wetted)	316/316L SS, Hastelloy® C-276*[2], Monel®400**[3]
Extension Tube Material	316 SS[4]
Head Gaskets	Glass-filled PTFE standard. Viton® and graphite are optional.
Meter Body Bolting	Carbon Steel (Zinc plated) standard. Options include 316 SS, NACE A286 SS bolts, Monel K500, Super Duplex and B7M.
Optional Adapter Flange and Bolts	Adapter Flange materials include 316 SS[4], Hastelloy C-276[6] and Monel 400[7]. Bolt material for flanges is dependent on process head bolts material chosen. Standard adaptor seal material is glass-filled PTFE. Viton and graphite are optional.
Mounting Flange **STF828, STF832** **STF82F, STF83F**	**Flush or Extended Diaphragm:** Zinc Chromate plated Carbon Steel[5], 304 SS, or 316 SS[4]. 316L SS *(NOTE: Mounting Flange is process wetted.)*
Fill Fluid	Silicone 200, CTFE, NEOBEE M-20 or Silicone 704.
Electronic Housing	Pure Polyester Powder Coated Low Copper (<0.4%)-Aluminum. Meets NEMA 4X, IP66, & P67. All stainless steel housing is optional.
Mounting	See **Figure 3** for typical flange mounting arrangement.
Process Connections	
All Models	**Process Head:** 1/4-inch NPT; 1/2-inch NPT with adapter and DIN, standard options.
STF828, STF832	**Flange:** 2, 3 or 4-inch Class 150 or 300 ANSI; DN50-PN40, DN80-PN40 or DN100-PN40 DIN flange. **Extended Diaphragm:** 2, 4, or 6 inches (50, 101, 152 mm) long.
STF82F, STF83F	2 or 3-inch, Class 150 ANSI flange.
Wiring	Accepts up to 16 AWG (1.5 mm diameter).
Dimensions	See **Figure** 4**, Figure 5 & Figure 6**
Net Weight	STF82F, STF83F:14-19 pounds (6.4 - 8.7Kg) with Aluminum Housing STF828, STF832: 18-32 pounds (8.2 - 14.5Kg) with Aluminum Housing

[1] Vent/Drains are sealed with Teflon®
[2] Hastelloy C-276 or UNS N10276.
[3] Monel 400 or UNS N04400.
[4] Supplied as 316 SS or as Grade CF8M, the casting equivalent of 316 SS.
[5] Carbon Steel heads are zinc-plated and not recommended for water service due to hydrogen migration. For that service, use 316 stainless steel wetted Process Heads.
[6] Hastelloy C-276 or UNS N10276. Supplied as indicated or as Grade CW12MW, the casting equivalent of Hastelloy C-276.
[7] Monel 400 or UNS N04400. Supplied as indicated or as Grade M30C, the casting equivalent of Monel 400.
* Flush design only.
**Flush or pseudo flange design.

Communications Protocols & Diagnostics

HART Protocol

Version:

HART 7

Foundation Fieldbus (FF)

Available Function Blocks

Block Type	Qty	Execution Time
Resource	1	n/a
Transducer	1	n/a
Diagnostic	1	n/a
Analog Input	1*	30 ms
PID w/Autotune	1	45 ms
Integrator	1	30 ms
Signal Char (SC)	1	30 ms
LCD Display	1	n/a
Flow Block	1	30 ms
Input Selector	1	30 ms
Arithmetic	1	30 ms

* AI block may have two (2) additional instantiations.

All available function blocks adhere to FOUNDATION Fieldbus standards. PID blocks support ideal & robust PID algorithms with full implementation of Auto-tuning.

Link Active Scheduler

Transmitters can perform as a backup Link Active Scheduler and take over when the host is disconnected. Acting as a LAS, the device ensures scheduled data transfers typically used for the regular, cyclic transfer of control loop data between devices on the Fieldbus.

Number of Devices/Segment

Entity IS model: 6 devices/segment

Schedule Entries

18 maximum schedule entries

Number of VCR's: 24 max

Compliance Testing: Tested according to ITK 6.0.1

Software Download

Utilizes Class-3 of the Common Software Download procedure as per FF-883 which allows the field devices of any manufacturer to receive software upgrades from any host.

Honeywell Digitally Enhanced (DE)

DE is a Honeywell proprietary protocol which provides digital communications between Honeywell DE enabled field devices and Hosts.

Standard Diagnostics

ST 800 top level diagnostics are reported as either critical or non-critical and are readable via the DD/DTM/FDI tools or integral display. All critical diagnostics will appear on the Advanced and Standard integral displays, and some non-critical diagnostics will also appear on the Advanced integral display. Some of the diagnostics are listed below.

Critical Diagnostics

- Electronics Module Fault.
- Meter body Memory Corruption.
- Config Data Corruption.
- Electronics Module Diagnostics Failure.
- Meter body Critical Failure.
- Sensor Communication Timeout.

Non-Critical Diagnostics

- Electronics Module Fault.
- Display Failure.
- Electronics Module Comm Failure.
- Meter body Excess Correct.
- Sensor Over Temperature.
- Fixed Current Mode.
- PV Out of Range.
- No DAC Compensation.
- Tamper Attempt Alarm.

Refer to the product user manual for comprehensive list of diagnostics and details.

Other Certification Options

Materials

- NACE MRO175, MRO103, ISO15156

Hazardous Areal Certifications:

MSG CODE	AGENCY	TYPE OF PROTECTION	COMM. OPTION	ELECTRICAL PARAMETERS	AMBIENT TEMP (Ta)
A	FM Approvals™ USA	**Explosionproof:** Class I, Division 1, Groups A, B, C, D; Dust Ignition Proof: Class II, III, Division 1, Groups E, F, G; T6..T5 Class l, Zone 0/1, AEx db IIC T6..T5 Ga/Gb Class ll, Zone 21, AEx tb IIIC T95° Db	All	Note 1	T5: -50 ºC to 85ºC T6: -50 ºC to 65ºC
		Intrinsically Safe: Class I, II, III, Division 1, Groups A, B, C, D, E, F, G: T4 Class l, Zone 0, AEx ia IIC T4 Ga FISCO Field Device (Only for FF Option) Ex ia IIC T4 Ga; Ex ic IIC T4 Gc	4-20 mA / DE/ HART	Note 2a	-50 ºC to 70ºC
			Foundation Fieldbus	Note 2b	-50 ºC to 70ºC
		Nonincendive: Class I, Division 2, Groups A, B, C, D locations, T4 Class l, Zone 2, AEx nA IIC T4 Gc	4-20 mA / DE/ HART/ Foundation Fieldbus	Note 1	-50 ºC to 85ºC
		Enclosure: Type 4X/ IP66/ IP67	All	All	-
		STANDARDS: FM Class 3600:2011; FM Class 3610: 2010; FM Class 3611: 2004; FM Class 3615: 2006; FM Class 3616: 2011; FM Class 3810: 2005; ANSI/ISA 60079-0: 2013; ANSI/UL 60079-1: 2015; ANSI/UL 60079-11: 2014; ANSI/ISA 60079-15: 2012; ANSI/UL 60079-26: 2017; ANSI/UL 60079-31: 2015; ANSI/NEMA 250: 2003; ANSI/ IEC 60529: 2004			
B	Canadian Standards Association (CSA) USA and Canada	**Explosion Proof:** Class I, Division 1, Groups A, B, C, D; Class II, Division 1, Groups E, F, G; Class III, Division 1, T6..T5 Class I Zone 1 AEx db IIC T6..T5 Ga/Gb Ex db IIC T6..T5 Ga/Gb Zone 22 AEx tb IIIC T95° Db Ex tb IIIC T95° Db	All	Note 1	T5: -50°C TO 85°C T6: -50°C TO 65°C
		Intrinsically Safe: Class I, II, III, Division 1, Groups A, B, C, D; Class II, Division 1, Groups E, F, G; Class III, Division 1, T4 Class I Zone 0, AEx ia IIC T4 Ga Class I Zone 2, AEx ic IIC T4 Gc Ex ia IIC T4 Ga Ex ic IIC T4 Gc FISCO Field Device (Only for FF Option) Ex ia IIC T4 Ga; Ex ic IIC T4 Gc	4-20 mA / DE/ HART	Note 2	-50°C TO 70°C
			Foundation Fieldbus	Note 2	-50°C TO 70°C
		Nonincendive: Class I, Division 2, Groups A, B, C, D; Class II, Division 2, Groups F, G; Class III, Division 2, T4 Class I Zone 2 AEx nA IIC T4 Gc Ex nA IIC T4 Gc	4-20 mA / DE/ HART/ Foundation Fieldbus	Note 1	-50°C to 85°C
		Enclosure: Type 4X/ IP66/ IP67	All	All	-
		STANDARDS: CSA C22.2 No. 0-10; CSA C22.2 No. 94-M91; CSA C22.2 No. 25-1966; CSA C22.2 No. 30-M1986; CSA C22.2 No. 142-M1987; CSA C22.2 No. 157-92; CSA C22.2 No. 213-M1987;			

MSG CODE	AGENCY	TYPE OF PROTECTION	COMM. OPTION	ELECTRICAL PARAMETERS	AMBIENT TEMP (Ta)
		CSA-C22.2 No. 60529:05; CSA-C22.2 No. 60079-0:11; CSA-C22.2 No. 60079-1:11; CSA-C22.2 No. 60079-11:11; CSA-C22.2 No. 60079-15:12; CSA-C22.2 No. 60079-31:12; ISA 12.12.01-2010; ISA 60079-0: 2009; ISA 60079-11: 2011; ISA 60079-15: 2009; ISA 60079-26: 2008; ISA-60079-27:2007 (12.02.04)-2006 (R2011); UL 913 Ed. 6; UL 916:1998; ANSI/ISA-12.27.01-2011			
C	ATEX	**Flameproof: SIRA 12ATEX2233X** Ex II 1/2 G Ex db IIC T6..T5 Ga/Gb II 2 D Ex tb IIIC T95°C…T120°C Db	All	Note 1	T5: -50°C TO 85°C T6: -50°C TO 65°C
		Intrinsically Safe: SIRA 12ATEX2233X Ex II 1 G Ex ia IIC T4 Ga II 2 D Ex ia IIIC T125°C Db FISCO Field Device (Only for FF Option) II 1 G Ex ia IIC T4 Ga	4-20 mA / DE/ HART	Note 2	-50°C TO 70°C
			Foundation Fieldbus	Note 2	-50°C TO 70°C
		Zone 2, Increase Safety: SIRA 12ATEX4234X Ex II 3 G Ex ec IIC T4 Gc	4-20 mA / DE/ HART/	Note 1	-50°C TO 85°C
		Zone 2, Intrinsically Safe: SIRA 12ATEX4234X Ex II 3 G Ex ic IIC T4 Gc FISCO Field Device (Only for FF Option) II 3 G Ex ic IIC T4 Gc	4-20 mA / DE/ HART/ Foundation Fieldbus	Note 2	-50°C TO 85°C
		Enclosure: IP66/ IP67	All	All	-
		STANDARDS: EN 60079-0: 2018; EN 60079-1: 2014; EN 60079-7: 2015; EN 60079-11: 2012; EN 60079-26: 2015; EN 60079-31: 2014			
	UKEX	**Flameproof: CSAE 22UKEX1021X** Ex II 1/2 G Ex db IIC T6..T5 Ga/Gb II 2 D Ex tb IIIC T95°C…T120°C Db	All	Note 1	T5: -50°C TO 85°C T6: -50°C TO 65°C
		Intrinsically Safe: CSAE 22UKEX1021X Ex II 1 G Ex ia IIC T4 Ga II 2 D Ex ia IIIC T125°C Db FISCO Field Device (Only for FF Option) II 1 G Ex ia IIC T4 Ga	4-20 mA / DE/ HART	Note 2	-50°C TO 70°C
			Foundation Fieldbus	Note 2	-50°C TO 70°C
		Zone 2, Increase Safety: CSAE 22UKEX1008X Ex II 3 G Ex ec IIC T4 Gc	4-20 mA / DE/ HART/	Note 1	-50°C TO 85°C
		Zone 2, Intrinsically Safe: CSAE 22UKEX1008X Ex II 3 G Ex ic IIC T4 Gc FISCO Field Device (Only for FF Option) II 3 G Ex ic IIC T4 Gc	4-20 mA / DE/ HART/ Foundation Fieldbus	Note 2	-50°C TO 85°C
		Enclosure: IP66/ IP67	All	All	-
		STANDARDS: EN 60079-0: 2018; EN 60079-1: 2014; EN 60079-7: 2015; EN 60079-11: 2012; EN 60079-26: 2015; EN 60079-31: 2014			

MSG CODE	AGENCY	TYPE OF PROTECTION	COMM. OPTION	ELECTRICAL PARAMETERS	AMBIENT TEMP (Ta)
D	IECEx World	**Flameproof: IECEx SIR 12.0100X** Ex db IIC T6..T5 Ga/Gb Ex tb IIIC T95°C…T120°C Db	All	Note 1	T5: -50°C TO 85°C T6: -50°C TO 65°C
		Intrinsically Safe: IECEx SIR 12.0100X Ex ia IIC T4 Ga Ex Ia IIIC T125°C Db FISCO Field Device (Only for FF Option) Ex ia IIC T4 Ga; Ex ic IIC T4 Gc	4-20 mA / DE/ HART	Note 2	-50°C TO 70°C
			Foundation Fieldbus	Note 2	-50°C TO 70°C
		Zone 2, Increase Safety: IECEx SIR 12.0100X Ex ec IIC T4 Gc	4-20 mA / DE/ HART/ Foundation Fieldbus	Note 1	-50°C TO 85°C
		Zone 2, Intrinsically Safe: IECEx SIR 12.0100X Ex ic IIC T4 Gc FISCO Field Device (Only for FF Option) Ex ic IIC T4 Gc	4-20 mA / DE/ HART/ Foundation Fieldbus	Note 2	-50°C TO 85°C
		Enclosure: IP66/ IP67	All	All	-
		STANDARDS: IEC 60079-0: 2017; IEC 60079-1: 2014; IEC 60079-7: 2017; IEC 60079-11: 2011; IEC 60079-26: 2014; IEC 60079-31: 2013			

E	SAEx South Africa	**Flameproof :** Ex d IIC T6…T5 Ga/Gb Ex tb IIIC T95°C…T120°C Db	All	Note 1	T5: -50°C TO 85°C T6: -50°C TO 65°C
		Intrinsically Safe: Ex ia IIC Ga T4 FISCO Field Device (Only for FF Option) Ex ia IIC T4 Ga; Ex ic IIC T4 Gc	4-20 mA / DE/ HART	Note 2	-50°C TO 70°C
			Foundation Fieldbus	Note 2	-50°C TO 70°C
		Zone 2, Increase Safety: II 3 G Ex ec IIC T4 Gc	4-20 mA / DE/ HART/ Foundation Fieldbus	Note 1	-50°C TO 85°C
		Zone 2, Intrinsically Safe: Ex ic IIC T4 Gc FISCO Field Device (Only for FF Option) Ex ic IIC T4 Gc	4-20 mA / DE/ HART/ Foundation Fieldbus	Note 2	-50°C TO 85°C
		Enclosure: IP66/ IP67	All	All	-
F	INMETRO Brazil	**Flameproof:** Ex db IIC T6..T5 Ga/Gb Ex tb IIIC T95°C…T120°C Db	All	Note 1	T5: -50°C TO 85°C T6: -50°C TO 65°C
		Intrinsically Safe: Ex ia IIC T4 Ga	4-20 mA / DE/ HART	Note 2a	-50°C TO 70°C
		FISCO Field Device (Only for FF Option) Ex ia IIC T4 Ga; Ex ic IIC T4 Gc	Foundation Fieldbus	Note 2b	-50°C TO 70°C
		Zone 2, Increase Safety: II 3 G Ex ec IIC T4 Gc	4-20 mA / DE/ HART/ Foundation Fieldbus	Note 1	-50°C TO 85°C
		Zone 2, Intrinsically Safe: Ex ic IIC T4 Gc FISCO Field Device (Only for FF Option) Ex ic IIC T4 Gc	4-20 mA / DE/ HART/ Foundation Fieldbus	Note 2	-50°C TO 85°C
		Enclosure : IP 66/67	All	All	-
G	NEPSI CHINA	**Flameproof:** Ex db IIC T6..T5 Ga/Gb Ex tb IIIC T 95°C Db	All	Note 1	T5: -50°C TO 85°C T6: -50°C TO 65°C
		Intrinsically Safe: Ex ia IIC T4 Ga FISCO Field Device (Only for FF Option) Ex ia IIC T4 Ga; Ex ic IIC T4 Gc	4-20 mA / DE/ HART	Note 2	-50°C TO 70°C
			Foundation Fieldbus	Note 2	-50°C TO 70°C
		Zone 2, Increase Safety: II 3 G Ex ec IIC T4 Gc	4-20 mA / DE/ HART/ Foundation Fieldbus	Note 1	-50°C TO 85°C
		Zone 2, Intrinsically Safe: Ex ic IIC T4 Gc FISCO Field Device (Only for FF Option) Ex ic IIC T4 Gc	4-20 mA / DE/ HART/ Foundation Fieldbus	Note 2	-50°C TO 85°C
		Enclosure : IP 66/67	All	All	-

H	**KOSHA Korea**	**Flameproof :** Ex d IIC T4, T5, T6 Ex tD A21 IP66/IP67 T95°C…T120 °C	All	Note 1	T4: -50°C TO 85°C T5: -50°C TO 85°C T6: -50°C TO 65°C
		Intrinsically Safe: Ex ia IIC T4	4-20 mA / DE/ HART	Note 2	Ta= -50 ºC to 70ºC
			Foundation Fieldbus	Note 2	Ta= -50 ºC to 70ºC
		Enclosure: IP66/ IP67	All	All	-
I	**EAC Russia, Belarus and Kazakhstan**	**Flameproof:** Ga/Gb Ex d IIC T6..T5 Ex tb IIIC Db T 85°C	All	Note 1	T5: -50°C TO 85°C T6: -50°C TO 65°C
		Intrinsically Safe: Ga Ex ia IIC T4 X FISCO Field Device (Only for FF Option) Ga Ex ia IIC T4 X	4-20 mA / DE/ HART	Note 2	-50°C TO 70°C
			Foundation Fieldbus	Note 2	-50°C TO 70°C
		Zone 2, Non Sparking: 2 Ex nA IIC T4 Gc X	4-20 mA / DE/ HART/ Foundation Fieldbus	Note 1	-50°C TO 85°C
		Zone 2, Intrinsically Safe: Ga Ex ic IIC T4 X FISCO Field Device (Only for FF Option) 2 Ex ic IIC T4 Gc X	4-20 mA / DE/ HART/ Foundation Fieldbus	Note 2	-50°C TO 85°C
		Enclosure : IP 66/67	All	All	
J	**CCoE INDIA**	**Flameproof:** Ex d IIC T6..T5 Ga/Gb	All	Note 1	T5: -50°C TO 85°C T6: -50°C TO 65°C
		Intrinsically Safe: Ex ia IIC T4 Ga FISCO Field Device (Only for FF Option) Ex ia IIC T4 Ga; Ex ic IIC T4 Gc	4-20 mA / DE/ HART	Note 2	-50°C TO 70°C
			Foundation Fieldbus	Note 2	-50°C TO 70°C
		Non Sparking Ex nA IIC T4 Gc	4-20 mA / DE/ HART/ Foundation Fieldbus	Note 1	-50°C TO 85°C
		Enclosure: IP66/ IP67	All	All	-
K	**UATR UKRAINE**	**Flameproof:** II 1/2 G Ex db IIC T6..T5 Ga/Gb II 2 D Ex tb IIIC T95°C…T120°C Db	All	Note 1	T5: -50°C TO 85°C T6: -50°C TO 65°C
		Intrinsically Safe: II 1 G Ex ia IIC T4 Ga FISCO Field Device (Only for FF Option) II 1 G Ex ia IIC T4 Ga	4-20 mA / DE/ HART	Note 2	-50°C TO 70°C
			Foundation Fieldbus	Note 2	-50°C TO 70°C
		Enclosure: IP66/ IP67	All	All	-

Notes:

1. Operating Parameters:

   Voltage = 11 to 42 VDC Current = 4-20 mA Normal

   = 9 to 32 V (FF) = 30 mA (FF)

2. Intrinsically Safe Entity Parameters
   a. Analog/DE/HART Entity Values

   Vmax = Ui = 30V Imax= Ii = 105mA Ci = 4.2nF Li = 984 uH Pi = 0.9W

Transmitter with Terminal Block revision E or Later

Vmax = Ui = 30V Imax= Ii= 225mA Ci = 4.2nF Li = 0 Pi = 0.9W

Note: Transmitter with Terminal Block revision E or later

The revision is on the label that is on the module. There will be two lines of text on the label:

- First is the Module Part #: 50049839-001 or 50049839-002
- Second line has the supplier information, along with the REVISION:

XXXXXXX-EXXXX, THE "X" is production related, THE POSITION of the "E" IS THE REVISION

b. Foundation Fieldbus Entity Values

Vmax = Ui = 30V Imax = Ii = 180mA Ci = 0nF Li = 984 uH Pi = 1W

Transmitter with Terminal Block revision F or Later

Vmax = Ui = 30V Imax = Ii = 225mA Ci = 0nF Li = 0 Pi = 1 W

FISCO Field Device

Vmax = Ui = 17.5V Imax= Ii = 380 mA Ci = 0nF Li = 0 Pi = 5.32 W

Note : Transmitter with Terminal Block revision F or later

The revision is on the label that is on the module. There will be two lines of text on the label:

- First is the Module Part #: 50049839-003 or 50049839-004
- Second line has the supplier information, along with the REVISION:

XXXXXXX-EXXXX, THE "X" is production related, THE POSITION of the "E" IS THE REVISION

Approval Certifications:

Marine Certificates	This certificate defines the certifications covered for the ST 800 Pressure Transmitter family of products, including the SMV 800 Smart Multivariable Transmitter. It represents the compilation of the five certificates Honeywell currently has covering the certification of these products into marine applications. For ST 800 Smart Pressure Transmitter and SMV800 Smart Multivarible Transmitter
	American Bureau of Shipping (ABS) - 2009 Steel Vessel Rules 1-1-4/3.7, 4-6-2/5.15, 4-8-3/13 & 13.5, 4-8-4/27.5.1, 4-9-7/13. Certificate number: 04-HS417416-PDA
	Bureau Veritas (BV) - Product Code: 389:1H. Certificate number: 12660/B0 BV
	Det Norske Veritas (DNV) - Location Classes: Temperature D, Humidity B, Vibration A, EMC B, Enclosure C. For salt spray exposure; enclosure of 316 SST or 2-part epoxy protection with 316 SST bolts to be applied. Certificate number: A-11476
	Korean Register of Shipping (KR) - Certificate number: LOX17743-AE001
	Lloyd's Register (LR) - Certificate number: 02/60001(E1) & (E2)
SIL 2/3 Certification	IEC 61508 SIL 2 for non-redundant use and SIL 3 for redundant use according to EXIDA and TÜV Nord Sys Tec GmbH & Co. KG under the following standards: IEC61508-1: 2010; IEC 61508-2: 2010; IEC61508-3: 2010.
MEASUREMENT INTRUMENTS DIRECTIVE (MID) 2004/ 22/ EC	**Certificate Issued by** NMI Certin B.V. **Mechanical Class:** M3 **Electromagnetic Environment:** E3 **Ambient Temperature Range:** -25 ºC to + 55 ºC

Unit	Custom Calibration
STD820	0 to 1000 mBar
STD830	0 to 7 Bar
STA84L	0 to 35 Bar A
STG84L	0 to 35 Bar
STD870	0 to 100 Bar
STA87L	0 to 100 Bar A
STG87L	0 to 100 Bar

Reference Drawing

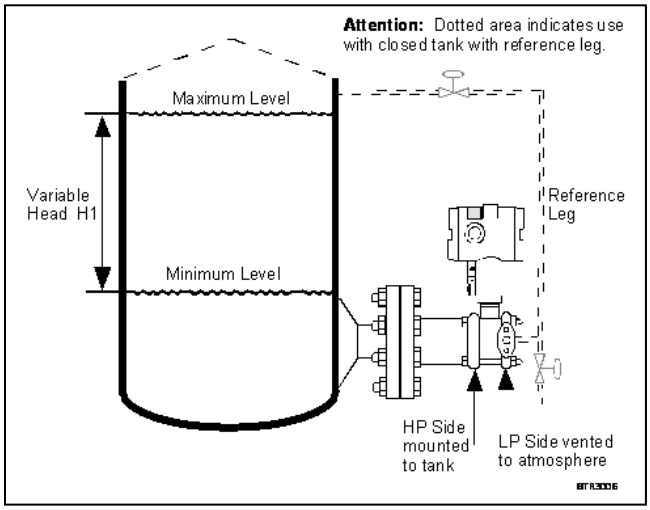

Figure 3 – Typical mounting for flange mounted level transmitter

Dimensional Drawings

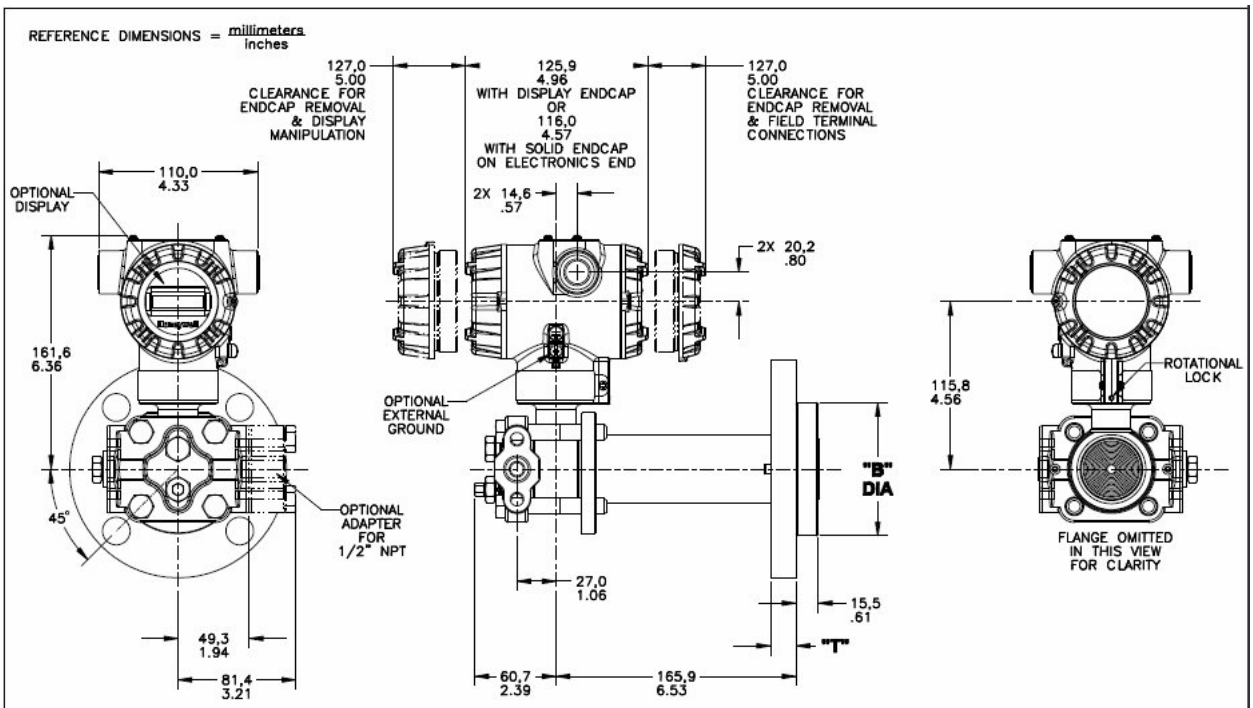

DESCRIPTION	"T"	FLANGE DIA.	BOLT HOLES/STUDS DIAMETER	BOLT HOLES/STUDS NUMBER	BOLT CIRCLE	"B" DIA
2" – 150#	19,1 .75	150,0 5.91	19,0 .75	4	120,7 4.75	92,1 3.63
2" – 300#	22.3 .88	165,0 6.50	19,0 .75	8	127,0 5.00	92,1 3.63
DIN DN50–PN40	20,0 .79	165,0 6.50	18,0 .71	4	125,0 4.92	102,0 4.02
3" – 150#	23,9 .94	190,0 7.48	19,0 .75	4	152,4 6.00	127,0 5.00
3" – 300#	28,6 1.13	210,0 8.27	22,2 .88	8	168,3 6.63	127,0 5.00
DIN DN80–PN40	24,0 .95	200,0 7.87	18,0 .71	8	160,0 6.30	138,0 5.43
4" – 150#	23,9 .94	230,0 9.06	19,0 .75	8	190,5 7.50	157,2 6.19
4" – 300#	31,8 1.25	255,0 10.04	22,2 .88	8	200,0 7.87	157,2 6.19
DIN DN100–PN40	24,0 .95	235,0 9.25	22,0 .87	8	190,0 7.48	162,0 6.38

FLUSH DIAPHRAGM TYPE MODELS

Figure 4– Typical mounting dimensions for flush diaphragm type models STF828 and STF832.

Dimensional Drawings (con't)

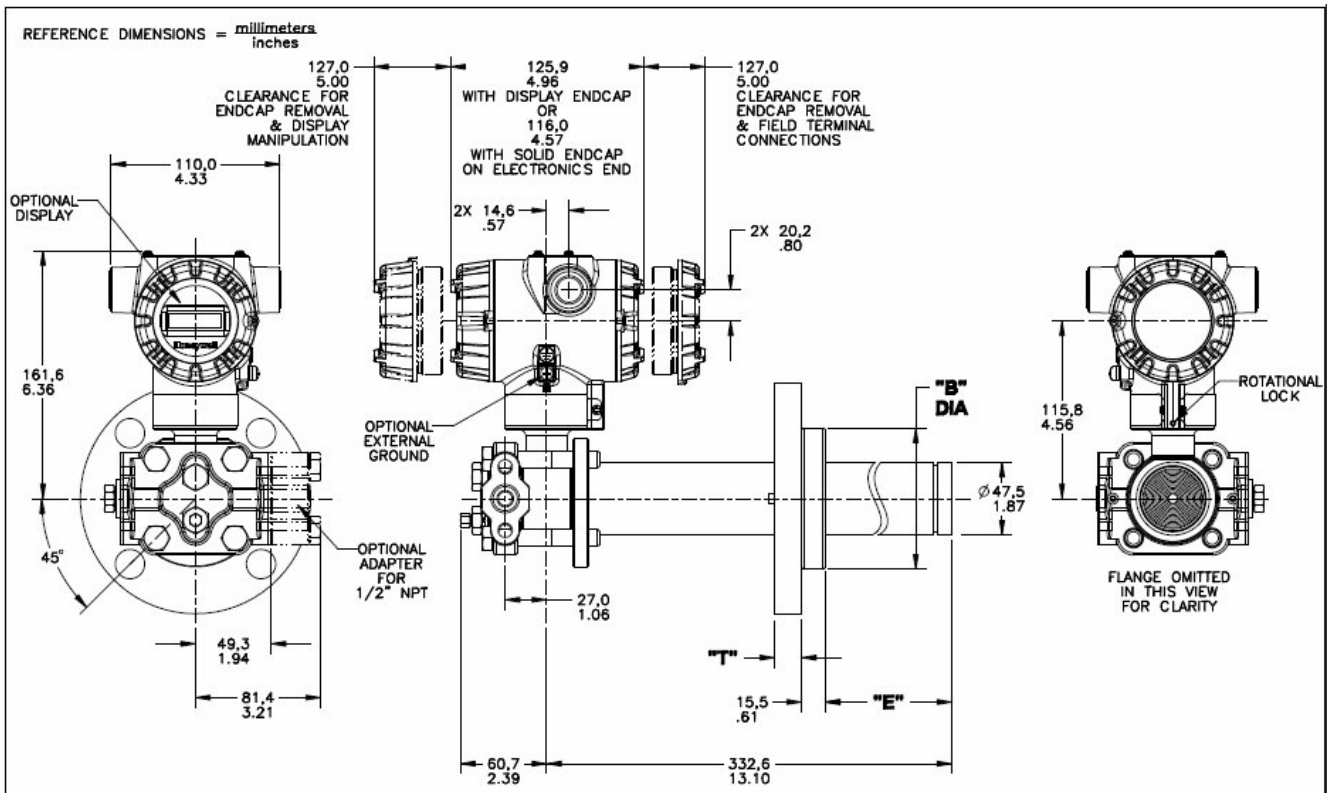

DESCRIPTION	"T"	FLANGE DIA.	BOLT HOLES/STUDS DIAMETER	BOLT HOLES/STUDS NUMBER	BOLT CIRCLE	"B" DIA	EXTENSIONS "E" 2"	EXTENSIONS "E" 4"	EXTENSIONS "E" 6"
2" – 150#	19,1 .75	150,0 5.91	19,0 .75	4	120,7 4.75	92,1 3.63			
2" – 300#	22.3 .88	165,0 6.50	19,0 .75	8	127,0 5.00	92,1 3.63			
DIN DN50–PN40	20,0 .79	165,0 6.50	18,0 .71	4	125,0 4.92	102,0 4.02			
3" – 150#	23,9 .94	190,0 7.48	19,0 .75	4	152,4 6.00	127,0 5.00			
3" – 300#	28,6 1.13	210,0 8.27	22,2 .88	8	168,3 6.63	127,0 5.00	50,8 2.00	101,6 4.00	152,4 6.00
DIN DN80–PN40	24,0 .95	200,0 7.87	18,0 .71	8	160,0 6.30	138,0 5.43			
4" – 150#	23,9 .94	230,0 9.06	19,0 .75	8	190,5 7.50	157,2 6.19			
4" – 300#	31,8 1.25	255,0 10.04	22,2 .88	8	200,0 7.87	157,2 6.19			
DIN DN100–PN40	24,0 .95	235,0 9.25	22,0 .87	8	190,0 7.48	162,0 6.38			

EXTENDED DIAPHRAGM TYPE MODELS

Figure 5– Typical mounting dimensions for extended diaphragm type models STF828 and STF832.

Dimensional Drawings (con't)

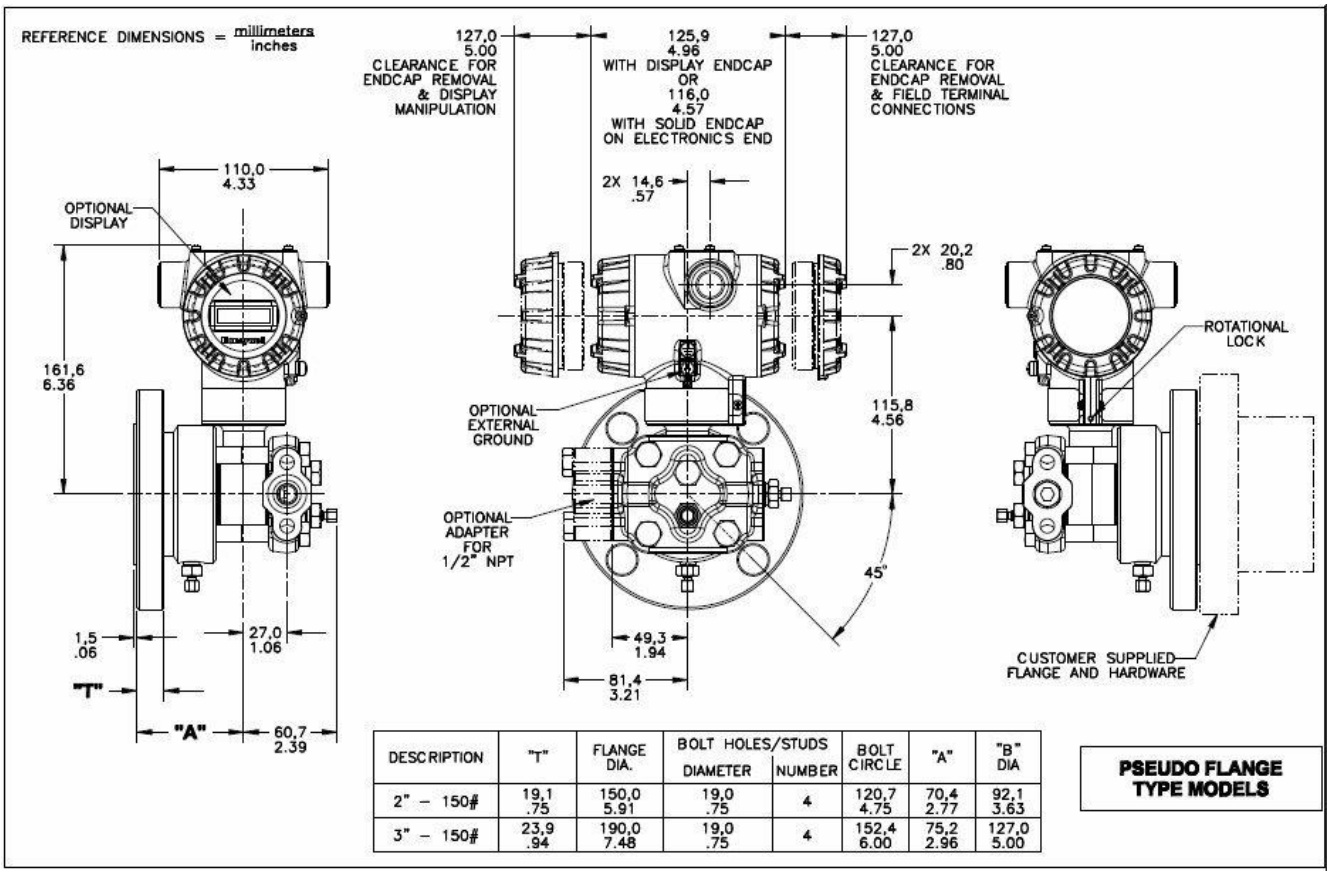

DESCRIPTION	"T"	FLANGE DIA.	BOLT HOLES/STUDS DIAMETER	BOLT HOLES/STUDS NUMBER	BOLT CIRCLE	"A"	"B" DIA
2" – 150#	19,1 .75	150,0 5.91	19,0 .75	4	120,7 4.75	70,4 2.77	92,1 3.63
3" – 150#	23,9 .94	190,0 7.48	19,0 .75	4	152,4 6.00	75,2 2.96	127,0 5.00

Figure 6– Typical mounting dimensions for pseudo flange type models STF82F, STF83F, and STF84F.

Model Selection Guide

Model Selection Guides are subject to change and are inserted into the specifications as guidance only.

Model STF800
Flange Mounted Liquid Level Transmitter

Model Selection Guide
34-ST-16-87, Issue 29

Instructions

- Select the desired Key Number. The arrow to the right marks the selection available.
- Make one selection from each Table (I, II and IX) using the column below the proper arrow.
- A (●) denotes unrestricted availability. A letter denotes restricted availability.
- Restrictions follow Table IX.

Key Number		I		II		III		IV		V		VI		VII		VIII		IX
STF8 _ _	-	_ _ _ _ _ _	-	_ _ _	-	_	-	_ _ _	-	_ _ _	-	_	-	_ _ _ _	-	_ _ , _ _	+	0 0 0 0

KEY NUMBER	URL	LRL	Max Span	Min Span	Units	Selection	Availability	
Measurement Range Std Accuracy	400 (1000)	-400 (-1000)	400 (1000)	4 (10)	" H_2O (mbar)	STF828	↓	
	100 (7)	-100 (-7)	100 (7)	1 (0.07)	psi (bar)	STF832	↓	
	400 (1000)	-400 (-1000)	400 (1000)	1 (2.5)	" H_2O (mbar)	STF82F		↓
	100 (7)	-100 (-7)	100 (7)	1 (0.07)	psi (bar)	STF83F		↓

TABLE I

	Materials of Construction	Design	Ref. Head	Vent Drain Valve on Ref. Head [2]	Barrier Diaphrm. (wetted)	Diaphrm. Plate (wetted)	Extension (wetted)	Sel.		
Meter Body & Flange Design	a. Process Wetted Heads & Diaphragm Materials	Flush	Carbon [1] Steel	316 SS	316L SS	316L SS	N/A	A _ _ _ _ _	●	
					Hast C [3]	316L SS		W _ _ _ _ _	●	
					Hast C [3]	Hast C [3]		B _ _ _ _ _	●	
					Monel 400 [4]	Monel 400 [4]		C _ _ _ _ _	●	
			316 SS [5]		316L SS	316L SS		E _ _ _ _ _	●	
					Hast C [3]	316L SS		X _ _ _ _ _	●	
					Hast C [3]	Hast C [3]		F _ _ _ _ _	●	
					Monel 400 [4]	Monel 400 [4]		G _ _ _ _ _	●	
			Hast C [3, 6]	Hast C [3]	Hast C [3]	Hast C [3]		J _ _ _ _ _	●	
			Monel 400 [4, 7]	Monel 400 [10]	Monel 400 [4]	Monel 400 [4]		L _ _ _ _ _	a	
		Extended	Carbon [1] Steel	316 SS	316L SS	316L SS	316L SS	M _ _ _ _ _	●	
					Hast C [3]			N _ _ _ _ _	●	
			316 SS [5]		316L SS			R _ _ _ _ _	●	
					Hast C [3]			S _ _ _ _ _	●	
		Pseudo Flange	Carbon [1] Steel	316 SS	316L SS	N/A	N/A	1 _ _ _ _ _		●
					Hast C [3]			2 _ _ _ _ _		●
					Monel 400 [4]			3 _ _ _ _ _		●
			316 SS [5]		316L SS			4 _ _ _ _ _		●
					Hast C [3]			5 _ _ _ _ _		●
					Monel 400 [4]			6 _ _ _ _ _		●
	b. Fill Fluid (Meter Body & Flange)	Silicone Oil 200						_ 1 _ _ _ _	●	●
		Fluorinated Oil CTFE						_ 2 _ _ _ _	●	●
		Silicone Oil 704						_ 3 _ _ _ _	●	●
		NEOBEE® M-20						_ 4 _ _ _ _	●	●
	c. Process Connection	Reference Head				Flange		Sel.		
		1/4 NPT				High Pressure Side		_ _ A _ _ _	●	●
						Low Pressure Side		_ _ C _ _ _		●
		1/2 NPT Adapter - material matches head material and head bolt material [11]				High Pressure Side		_ _ H _ _ _	●	●
						Low Pressure Side		_ _ K _ _ _		●
	d. Bolts for Process Heads	Carbon Steel Bolts						_ _ _ C _ _	●	●
		316 SS Bolts						_ _ _ S _ _	●	●
		A286 SS (NACE) Bolts						_ _ _ N _ _	●	●
		B7M Bolts						_ _ _ B _ _	●	●
	e. Vent/Drain Type/Location	Ref. Head Type	Vent Type	Location	Vent Material			Sel.		
		Single Ended	None	None	None			_ _ _ _ 1 _	●	●
		Single Ended	Std	Side	Matches Head Material [11]			_ _ _ _ 2 _	●	●
		Single Ended	Ctr Vent	Side	Stainless Steel Only			_ _ _ _ 3 _	t	t
		Dual Ended	Std	End	Matches Head Material [11]			_ _ _ _ 4 _	●	●
		Dual Ended	Ctr Vent	End	Stainless Steel Only			_ _ _ _ 5 _	t	t
		Dual Ended	Vent/Plug	Side/End	Matches Head Material [11]			_ _ _ _ 6 _	●	●
	f. Gasket Material	Teflon® or PTFE (Glass Filled)						_ _ _ _ _ A	●	●
		Viton® or Fluorocarbon Elastomer						_ _ _ _ _ B	●	●

[1] Carbon Steel heads are zinc-plated and not recommended for water service due to hydrogen migration. For that service, use the 316 stainless steel Wetted Reference Head.

[2] Vent/Drains are Teflon or PTFE coated for lubricity.

[3] Hastelloy® C-276 or UNS N10276

[4] Monel 400® or UNS N04400

[5] Supplied as 316 SS or as Grade CF8M, the casting equivalent of 316 SS.

[6] Supplied as indicated or as Grade CW12MW, the casting equivalent of Hastelloy® C-276

[7] Supplied as indicated or as Grade M30C, the casting equivalent of Monel 400®

[10] Monel 400® or UNS N04400 or UNS N04405

[11] Except Carbon Steel Heads shall use 316SS Vent/Drain, Plugs & Adapters when required

TABLE II			Flange Material	Threaded Nut Ring Material	Selection	Availability STF8xx 28 32	2F 3F
Flange Assembly	a. Flange (ANSI Flanges have 125-500 AARH Surface Finish)	3" ANSI Class 150	Carbon Steel (non-wetted)	Carbon Steel (non-wetted)	1 _ _	●	
		3" ANSI Class 300			2 _ _	●	
		DN80-PN40 DIN			3 _ _	●	
		4" ANSI Class 150			4 _ _	●	
		4" ANSI Class 300			5 _ _	●	
		DN100-PN40 DIN			6 _ _	●	
		2" ANSI Class 150			7 _ _	●	
		2" ANSI Class 300			8 _ _	●	
		DN50-PN40 DIN			9 _ _	●	
		3" ANSI Class 150	304 SS (non-wetted)	304 SS (non-wetted)	A _ _	●	
		3" ANSI Class 300			B _ _	●	
		DN80-PN40 DIN			C _ _	●	
		4" ANSI Class 150			D _ _	●	
		4" ANSI Class 300			E _ _	●	
		DN100-PN40 DIN			F _ _	●	
		2" ANSI Class 150			Q _ _	●	
		2" ANSI Class 300			U _ _	●	
		DN50-PN40 DIN			V _ _	●	
		3" ANSI Class 150	316 SS (non-wetted)	304 SS (non-wetted)	H _ _	●	
		3" ANSI Class 300			J _ _	●	
		DN80-PN40 DIN			K _ _	●	
		4" ANSI Class 150			L _ _	●	
		4" ANSI Class 300			M _ _	●	
		DN100-PN40 DIN			N _ _	●	
		2" ANSI Class 150			W _ _	●	
		2" ANSI Class 300			X _ _	●	
		DN50-PN40 DIN			Z _ _	●	
		Pseudo Flange on Standard DP			**Sel.**		
		2" ANSI Class 150 without Vent/Drain	316L SS (wetted)	Not Applicable	S _ _		●
		2" ANSI Class 150 with Vent/Drain			T _ _		●
		3" ANSI Class 150 without Vent/Drain			P _ _		●
		3" ANSI Class 150 with Vent/Drain			R _ _		●
	b. Gasket Ring (wetted)	No Selection			_ 0 _		●
		Flush Design		316L SS	_ 1 _	s	
				Hastelloy® C [3]	_ 2 _	s	
				Monel 400® [4]	_ 3 _	q	
		Extended Design		316L SS	_ 5 _	v	
	c. Extension (wetted)	No Selection			_ _ 0		●
		Flush			_ _ F	w	
		Diameter		**Length**	**Sel.**		
		1.87 Inches (for 2", 3" or 4 " spud)[13]		2 inches	_ _ C	v	
				4 inches	_ _ D	v	
				6 inches	_ _ E	v	

[3] Hastelloy® C-276 or UNS N10276

[4] Monel 400® or UNS N04400

[13] For part numbers and pricing information on Tank Spuds refer to page ST-91 (Supplementary Accessories & Kits).

TABLE III	Agency Approvals (see data sheet for Approval Code Details)	Selection		
Approvals	No Approvals Required	0	*	*
	FM Explosion proof, Intrinsically Safe, Non-incendive, & Dustproof	A	*	*
	CSA Explosion proof, Intrinsically Safe, Non-incendive, & Dustproof	B	*	*
	ATEX Explosion proof, Intrinsically Safe & Non-incendive	C	*	*
	IECEx Explosion proof, Intrinsically Safe & Non-incendive	D	*	*
	SAEx Explosion proof, Intrinsically Safe & Non-incendive	E	*	*
	INMETRO Explosion proof, Intrinsically Safe & Non-incendive	F	*	*
	NEPSI Explosion proof, Intrinsically Safe & Non-incendive	G	*	*
	KOSHA Explosion proof, Intrinsically Safe & Non-incendive	H	*	*
	EAC Customs Union (Russia,Belarus,Kazakhstan) Ex Approval,Flame proof, Intrinsically Safe	I	*	*
	CCoE Explosion proof, Intrinsically Safe & Non-incendive	J	*	*
	UATR Flameproof, Intrinsically Safe & Dustproof	K	*	*

TABLE IV	TRANSMITTER ELECTRONICS SELECTIONS			STF8xx Selection	Availability	
	Material	Connection	Lightning Protection			
a. Electronic Housing Material & Connection Type	Polyester Powder Coated Aluminum	1/2 NPT	None	A _ _	*	*
	Polyester Powder Coated Aluminum	M20	None	B _ _	*	*
	Polyester Powder Coated Aluminum	1/2 NPT	Yes	C _ _	*	*
	Polyester Powder Coated Aluminum	M20	Yes	D _ _	*	*
	316 Stainless Steel (Grade CF8M)	1/2 NPT	None	E _ _	*	*
	316 Stainless Steel (Grade CF8M)	M20	None	F _ _	*	*
	316 Stainless Steel (Grade CF8M)	1/2 NPT	Yes	G _ _	*	*
	316 Stainless Steel (Grade CF8M)	M20	Yes	H _ _	*	*
b. Output/ Protocol	Analog Output	Digital Protocol				
	4-20mA dc	HART Protocol		_ H _	*	*
	4-20mA dc	DE Protocol		_ D _	u	u
	none	Foundation Fieldbus		_ F _	*	*
c. Customer Interface Selections	Indicator	Ext Zero, Span & Config Buttons	Languages			
	None	None	None	_ _ 0	*	*
	None	Yes (Zero/Span Only)	None	_ _ A	f	f
	Advanced	None	EN, GR, IT, FR, SP, RU, TU	_ _ D	*	*
	Advanced	Yes	EN, GR, IT, FR, SP, RU, TU	_ _ E	*	*
	Advanced	None	EN, CH, JP	_ _ H	*	*
	Advanced	Yes	EN, CH, JP	_ _ J	*	*
	Standard (w/internal Zero, Span & Conf Buttons)	None	EN, RU	_ _ S	r	r
	Standard (w/internal Zero, Span & Conf Buttons)	Yes	EN,RU	_ _ T	r	r

TABLE V	CONFIGURATION SELECTIONS			Selection	28 32	2F 3F
a. Application Software	Diagnostics					
	Standard Diagnostics			1 _ _	*	*
	Advanced Diagnostics (Type 1: w/Plugged Impulse Detection PILD)			2 _ _	*	*
b. Output Limit, Failsafe & Write Protect Settings	Write Protect	Fail Mode	High & Low Output Limits[3]			
	Disabled	High> 21.0mAdc	Honeywell Std (3.8 - 20.8 mAdc)	_ 1 _	f	f
	Disabled	Low< 3.6mAdc	Honeywell Std (3.8 - 20.8 mAdc)	_ 2 _	f	f
	Enabled	High> 21.0mAdc	Honeywell Std (3.8 - 20.8 mAdc)	_ 3 _	f	f
	Enabled	Low< 3.6mAdc	Honeywell Std (3.8 - 20.8 mAdc)	_ 4 _	f	f
	Enabled	N/A	N/A	_ 5 _	g	g
	Disabled	N/A	N/A	_ 6 _	g	g
c. General Configuration	Factory Standard			_ _ S	*	*
	Custom Configuration (Unit Data Required from customer)			_ _ C	*	*

[3] NAMUR Output Limits 3.8 - 20.5mAdc can be configured by the customer or select custom configuration Table Vc

TABLE VI	CALIBRATION & ACCURACY SELECTIONS			Selection		
	Accuracy	Calibrated Range	Calibration Qty			
Accuracy and Calibration	Standard	Factory Std	Single Calibration	A	*	*
	Standard	Custom (Unit Data Required)	Single Calibration	B	*	*
	Standard	Custom (Unit Data Required)	Dual Calibration	C	*	*
	Standard	Custom (Unit Data Required)	Triple Calibration	D	*	*
	High Accuracy	Factory Std	Single Calibration	E	h	h
	High Accuracy	Custom (Unit Data Required)	Single Calibration	F	h	h
	High Accuracy	Custom (Unit Data Required)	Dual Calibration	G	h	h
	High Accuracy	Custom (Unit Data Required)	Triple Calibration	H	h	h

TABLE VII	ACCESSORY SELECTIONS	Selection		
a. Mounting Bracket	None (not required with flange mount unit)	0 _ _ _	*	*
b. Customer Tag	No customer tag	_ 0 _ _	*	*
	One Wired Stainless Steel Tag (Up to 4 lines 26 char/line)	_ 1 _ _	*	*
	Two Wired Stainless Steel Tag (Up to 4 lines 26 char/line)	_ 2 _ _	*	*
c. Unassembled Conduit Plugs & Adapters	No Conduit Plugs or Adapters Required	_ _ A0	*	*
	1/2 NPT Male to 3/4 NPT Female 316 SS Certified Conduit Adapter	_ _ A2	n	n
	1/2 NPT 316 SS Certified Conduit Plug	_ _ A6	n	n
	M20 316 SS Certified Conduit Plug	_ _ A7	m	m
	Minifast® 4 pin (1/2 NPT)	_ _ A8	n	n
	Minifast® 4 pin (M20)	_ _ A9	m	m

TABLE VIII	OTHER Certifications & Options: (String in sequence comma delimited (XX, XX, XX,....)	Selection	STF8xx Availability		
Certifications & Warranty	None - No additional options	00	*	*	
	NACE MR0175; MR0103; ISO15156 (FC33338) Process wetted parts only	FG	*	*	b
	NACE MR0175; MR0103; ISO15156 (FC33339) Process wetted and non-wetted parts	F7	c	c	
	Marine (DNV, ABS, BV, KR, LR)	MT	i	i	
	EN10204 Type 3.1 Material Traceability (FC33341)	FX	*	*	
	Certificate of Conformance (F3391)	F3	*	*	b
	Calibration Test Report & Certificate of Conformance (F3399)	F1	*	*	
	Certificate of Origin (F0195)	F5	*	*	
	FMEDA (SIL 2/3) Certification (FC33337)	FE	j	j	
	Over-Pressure Leak Test Certificate (1.5X MAWP) (F3392)	TP	*	*	
	Cert Clean for O_2 or CL_2 service per ASTM G93	OX	e	e	
	PMI Certification[1]	PM	*	*	
	Extended Warranty Additional 1 year	01	*	*	
	Extended Warranty Additional 2 years	02	*	*	
	Extended Warranty Additional 3 years	03	*	*	b
	Extended Warranty Additional 4 years	04	*	*	
	Extended Warranty Additional 15 years	15	*	*	

TABLE IX	Manufacturing Specials			
Factory	Factory Identification	0000	*	*

MODEL RESTRICTIONS

Restriction Letter	Available Only with		Not Available with	
	Table	Selection(s)	Table	Selection(s)
a			VIII	FG, F7
b	Select only one option from this group			
c	Id	_ _ _ _ N,B _ _	Ia	L _ _ _ _ _
e	Ib	_ 2 _ _ _ _		
f			IVb	_ F _
g			IVb	_ H,D _
h	Ia	A,E,M,R,1,4 _ _ _ _ _		
i	IVa	C,D,G,H _ _		
j	IVb	_ H _	Vb	_ 1,2,5,6, _
m	IVa	B,D,F,H _ _		
n	IVa	A,C,E,G _ _		
q	Ia	C,G,L _ _ _ _ _		
r	IVb	_ H _		
s	Ia	A,W,B,E,X,F,J _ _ _ _ _		
t			Ia	J,L _ _ _ _ _
u			Va	2 _ _
			VI	C,D,G,H
v	Ia	M,N,R,S _ _ _ _ _		
w			Ia	M,N,R,S _ _ _ _ _
			IIb	_ 5 _

[1]The PM option is available on all Smartline Pressure Transmitter process wetted parts such as process heads, flanges, bushings and vent plugs except plated carbon steel process heads and flanges. PM option information is also available on diaphragms except Gold plated and STG and STA in-line construction pressure transmitters.

FIELD INSTALLABLE REPLACEMENT PARTS

Description	Kit Number	Price
Integrally Mounted Basic Indicator Kit (Compatible with all Electronic Modules)	50049911-501	Note P
Integrally Mounted Advanced Indicator Kit (compatible with all Electronic Modules)	50049846-501	Note P
Terminal Strip w/Lightning Protection Kit for HART or DE Modules	50075472-532	Note P
Terminal Strip w/Lightning Protection Kit for FFB Module	50075472-534	Note P
Terminal Strip w/o Lightning Protection for HART or DE Modules	50075472-531	Note P
Terminal Strip w/o Lightning Protection FFB Module	50075472-533	Note P
HART Electronics Module	50049849-501	Note P
HART Electronics Module w/connection for external configuration buttons	50049849-502	Note P
DE Electronics Module	50049849-503	Note P
DE Electronics Module w/connection for external configuration buttons	50049849-504	Note P
FFB Electronics Module Kit	50049849-507	Note P
FFB Electronics Module w/connection for external configuration buttons	50049849-508	Note P

Note P - For part number pricing please refer to WEB Channel.

PRODUCT MANUALS

Description	Part Number
ST 800 Smart Transmitter User Manual - English	34-ST-25-35
ST 800 Smart Transmitter HART/DE Communications Manual - English	34-ST-25-38
ST 800 Smart Transmitter Safety Manual - English	34-ST-25-37
ST 800 Smart Transmitter Foundation Fieldbus Manual - English	34-ST-25-39
ST 800 Smart Transmitter Function Block Manual - English	34-ST-25-42

All product documentation is available at www.process.honeywell.com.

Hastelloy® is a registered trademark of Haynes International
Monel 400® is a registered trademark of Special Metals Corporation.
HART® is a registered trademark of HART Communication Foundation.
FOUNDATION™ Fieldbus is a trademark of Fieldbus Foundation.
Viton® is a registered trademark of DuPont Performance Elastomers.
Teflon® is a registered trademark of DuPont.
FM Approvals℠ is a service mark of FM Global
DC® 200 is a registered trademark of Dow Corning

Sales and Service

For application assistance, current specifications, ordering, pricing, and name of the nearest Authorized Distributor, contact one of the offices below.

ASIA PACIFIC

Honeywell Process Solutions,
Phone: + 800 12026455 or
+44 (0) 1202645583
(TAC) **hfs-tac-support@honeywell.com**

Australia
Honeywell Limited
Phone: +(61) 7-3846 1255
FAX: +(61) 7-3840 6481
Toll Free 1300-36-39-36
Toll Free Fax:
1300-36-04-70

China – PRC - Shanghai
Honeywell China Inc.
Phone: (86-21) 5257-4568
Fax: (86-21) 6237-2826

Singapore
Honeywell Pte Ltd.
Phone: +(65) 6580 3278
Fax: +(65) 6445-3033

South Korea
Honeywell Korea Co Ltd
Phone: +(822) 799 6114
Fax: +(822) 792 9015

EMEA

Honeywell Process Solutions,
Phone: + 800 12026455 or
+44 (0) 1202645583

Email: (Sales)
FP-Sales-Apps@Honeywell.com
or
(TAC)
hfs-tac-support@honeywell.com

Web
Knowledge Base search
engine **http://bit.ly/2N5VIdi**

AMERICAS

Honeywell Process Solutions,
Phone: (TAC) (800) 423-9883
or (215) 641-3610
(Sales) 1-800-343-0228

Email: (Sales)
FP-Sales-Apps@Honeywell.com
or
(TAC)
hfs-tac-support@honeywell.com

Web
Knowledge Base search
engine **http://bit.ly/2N5VIdi**

Specifications are subject to change without notice

.

For more information
To learn more about SmartLine Transmitters,
visit www.process.honeywell.com
Or contact your Honeywell Account Manager

Process Solutions
Honeywell
1250 W Sam Houston Pkwy S
Houston, TX 77042

Honeywell Control Systems Ltd
Honeywell House, Skimped Hill Lane
Bracknell, England, RG12 1EB

Shanghai City Centre, 100 Jungi Road
Shanghai, China 20061

Honeywell

34-ST-03-87
October 2023

www.process.honeywell.com

©2023 Honeywell International Inc.